Calavera del Musico

The idea of this product comes from the Mexican tradition of making sugar skulls to honor the dead on the Dia de los Muertos holiday. They signify the cycle of life and death and the importance of remembering the dead. Typically, these are made for ofrendas, which are essentially an altar to honor the spirits of deceased loved ones. This product is unique because it also combines other aspects of Mexican culture, specifically, the music and the vegetation. The top of the skull features part of a mariachi sombrero, which is an important symbol in Mexican culture as it represents pride and heritage, and it is a common part of mariachi bands' uniforms. The top of the skull is also hollow in the center to allow a small succulent to be planted to appear as the top of a sombrero. With sombreros having floral patterns, the native succulent plant works flawlessly as both a decorative piece and a symbol of important Mexican vegetation. After visiting Mexico almost every year, I have come to love the music of mariachi bands, so it was very important for me to incorporate that into the design. I also loved seeing the abundance of different types of succulents in the rural parts where my family lived. I used the UnTiED ideation method of Absurdity in the first step of ideation by combining vastly different parts of my culture and trying to make them work with each other. Rather than creating a typical pot for a plant to be placed in, I used these absurd ideas to create a new, unique product. I also sought random connections with the opening mouth and how it may also be used as a light source. The design heuristic cards used include 39 (incorporate environment) and 40 (incorporate user input). 39 is incorporated in the fact that the skull itself is used as a pot for plants, and 40 also inspired me to include a succulent in the first place, as you have to maintain the plant by giving it water and sunlight. Alongside this, 67 (unify) encouraged me to combine what were originally two separate ideas into one skull with he hat and plant. While the entire thing is generally symmetrical on both sides of the face, one of the eyes has a flower while the other is empty to signify the hollowness and also rebirth that can come from death. The patterns are also added to represent classic designs used in sugar skulls.

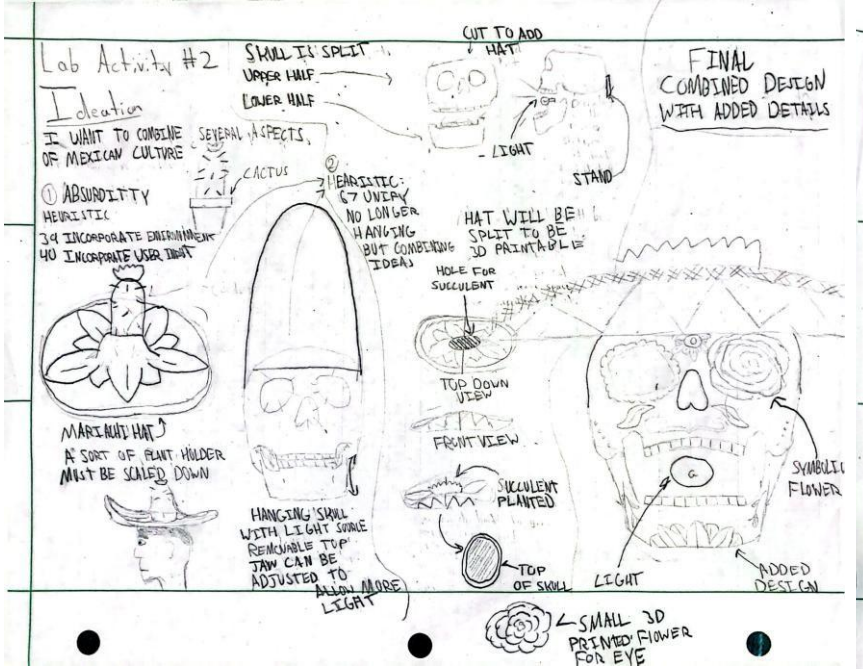

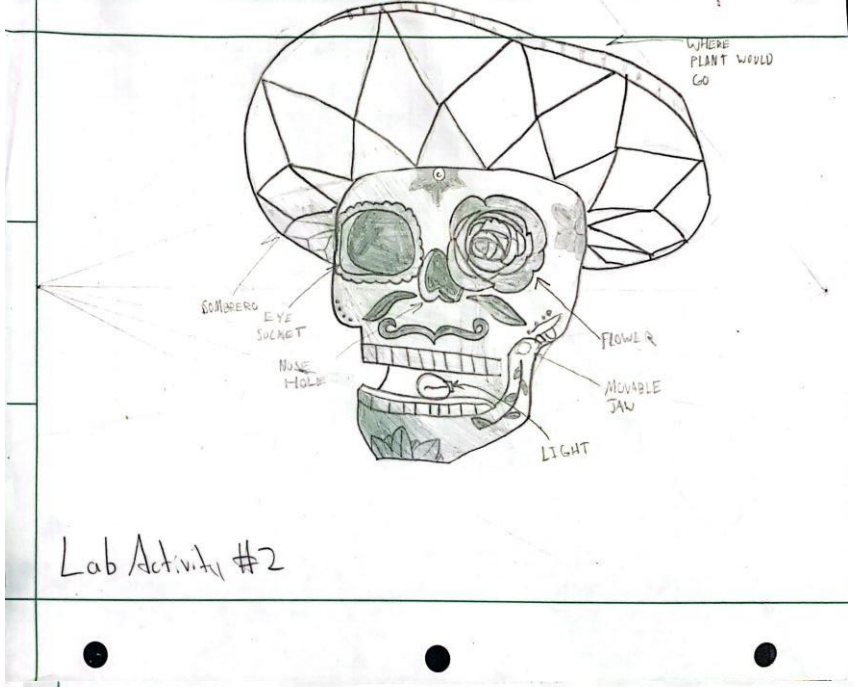

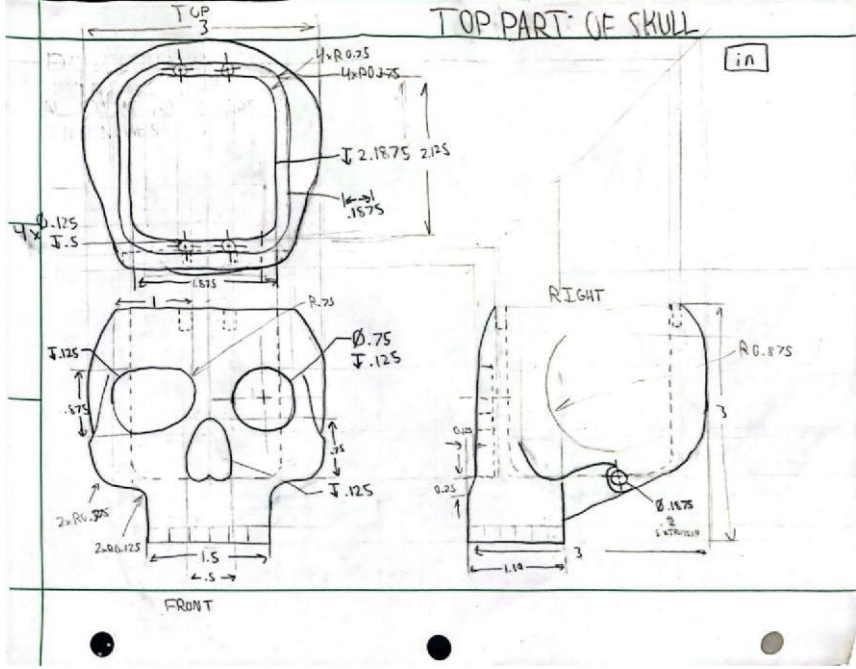

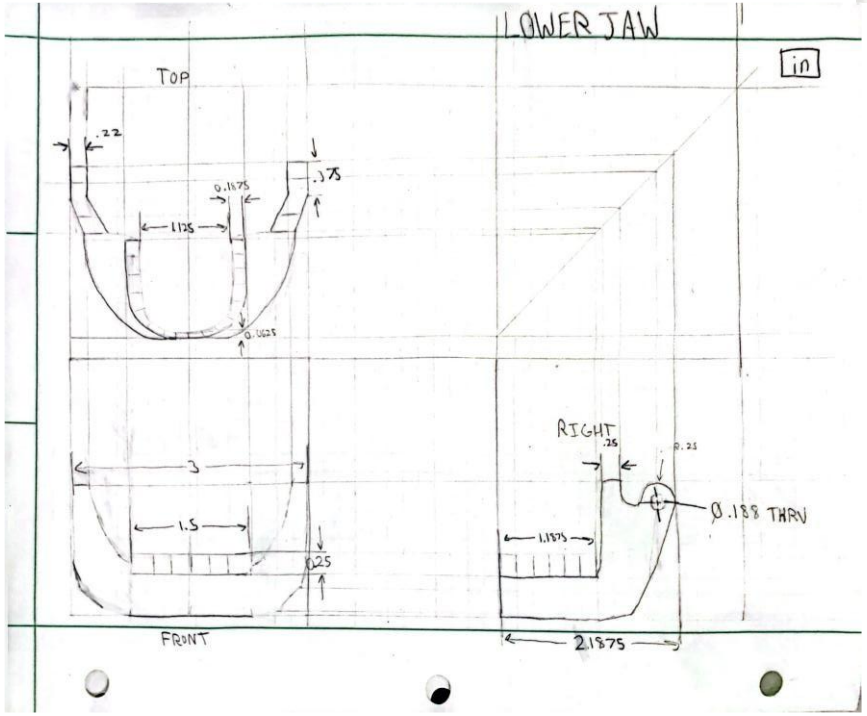

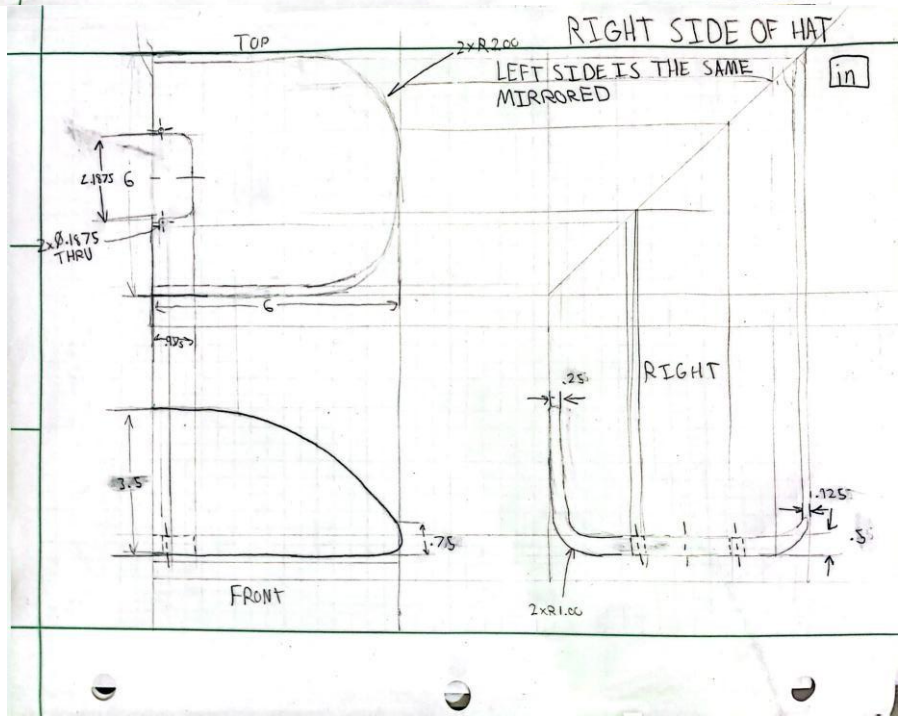

Thumbnails and Multi-views

Assembly Sketches Changes Made Between Multi-views and Models

- The skull needs to be scaled down slightly to be contained within the 3-inch cube allowed.
- The dimensions for the nose were changed slightly.

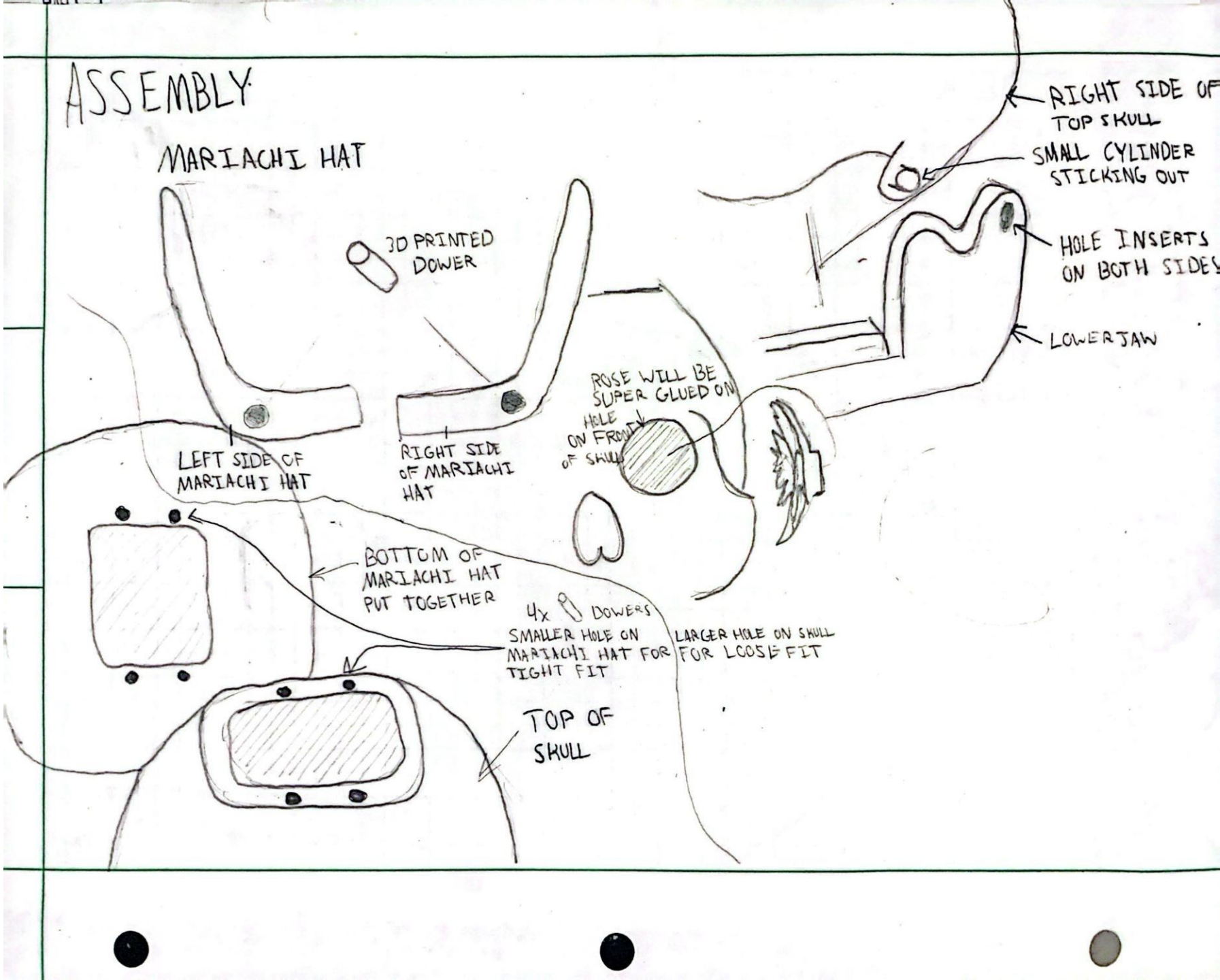

- The depth of the hole on the top of the skull was lowered to 2 inches rather than 2.1875.
- The circular hole in the side of the skull was not included
- The loft used to produce the skull produced less of a spherical shape than the one sketched.
- The positions of the holes on the top of the skull were moved to the other two edges.
- The width of the lower jaw was lowered.
- Filets and chamfers were added in several more locations.
- The mariachi hat was incorrectly dimensioned in the multi-view sketch, so it was corrected in the model.
- The depth of the hole used to connect the two sides of the mariachi hat was increased.
- The holes used to connect the mariachi hat to the skull were changed to extrusions that directly insert into the skull.
- The flower in the eye was modeled with more of a protrusion than before.

Part Models

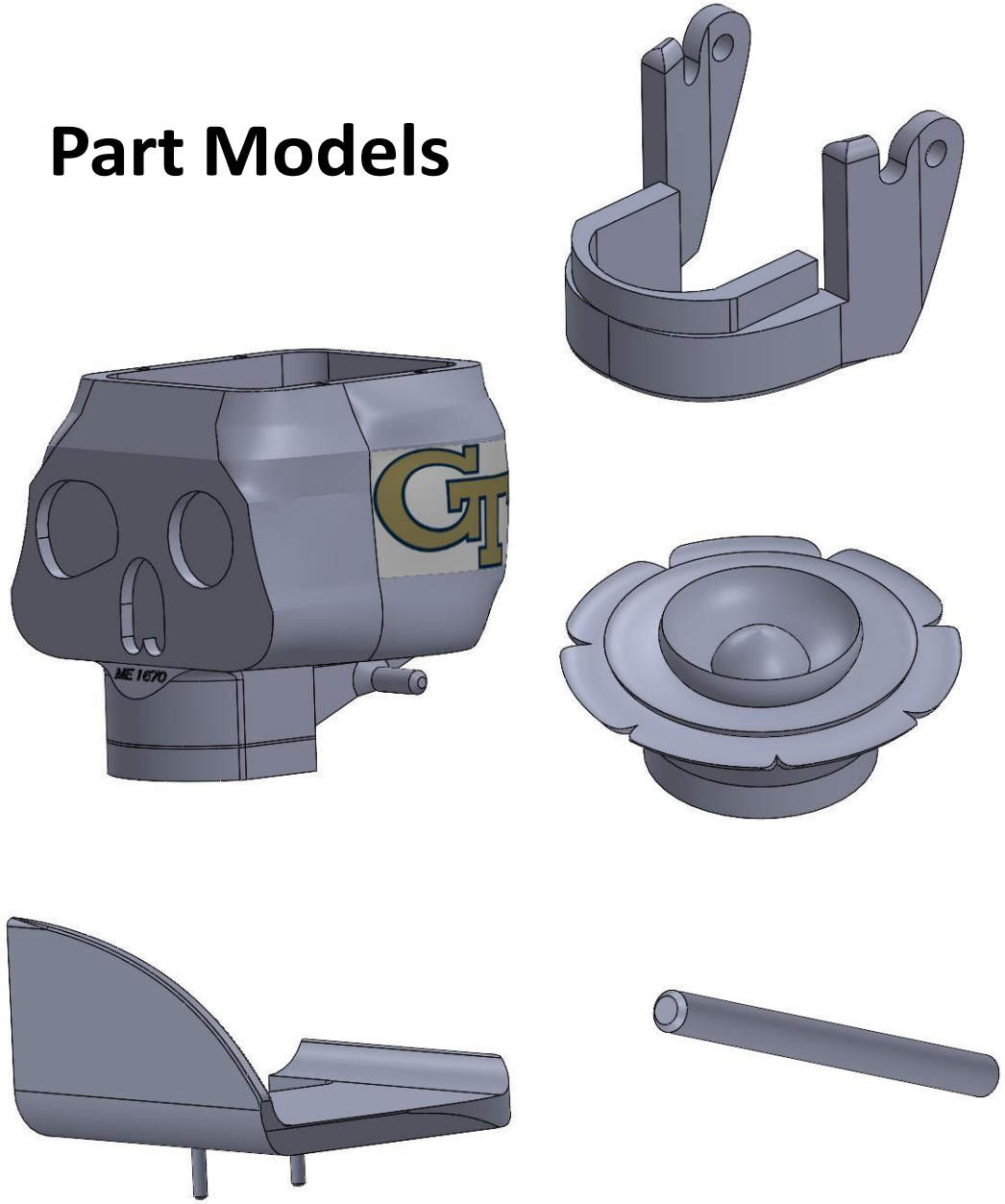

Model Tree of Complex Part

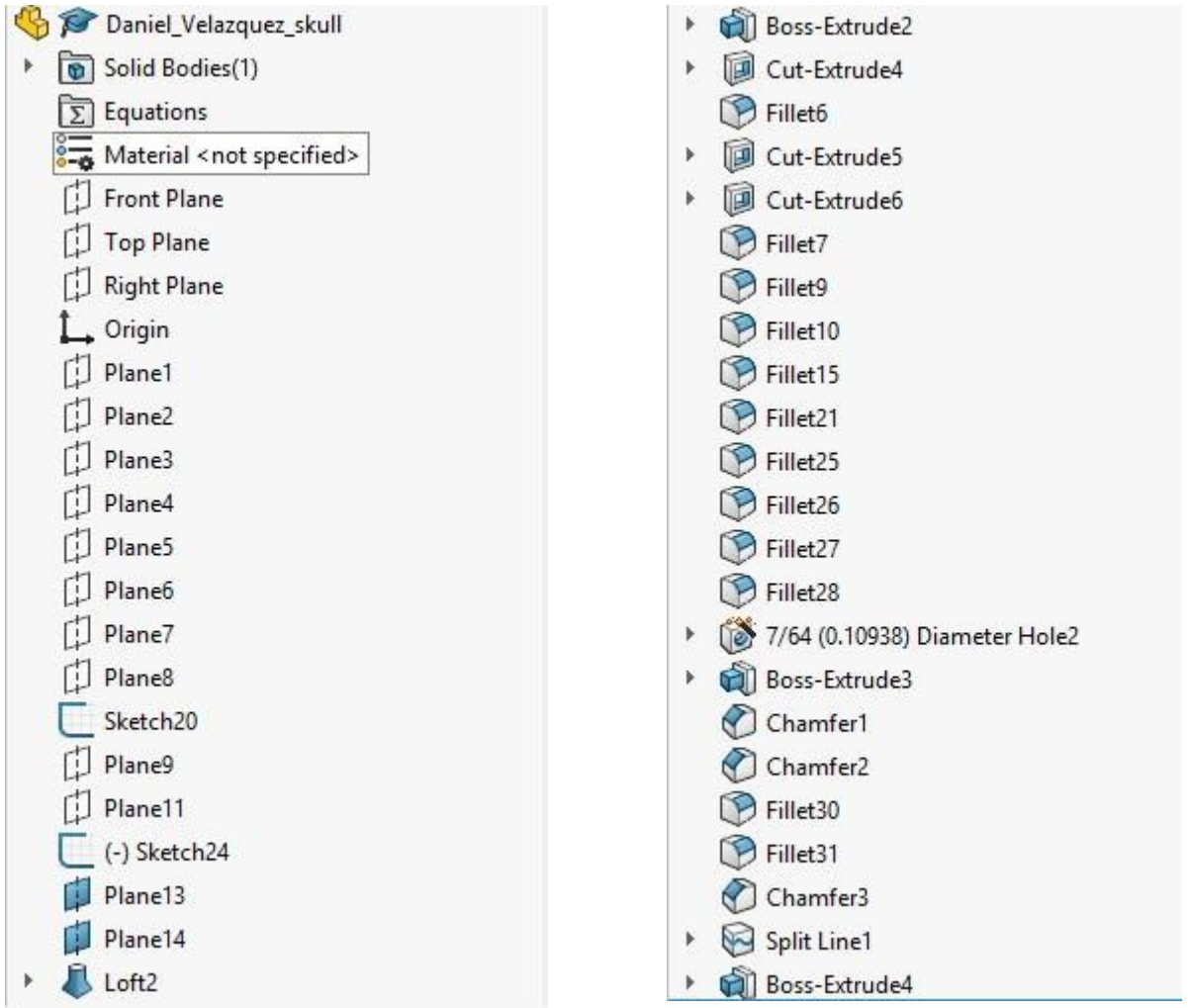

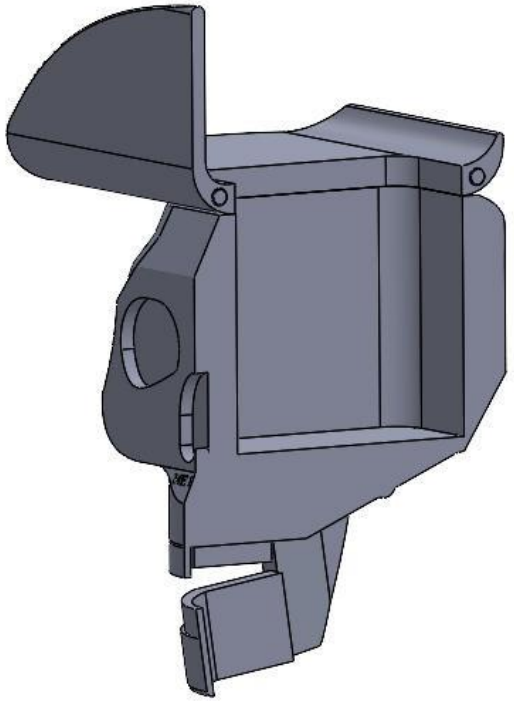

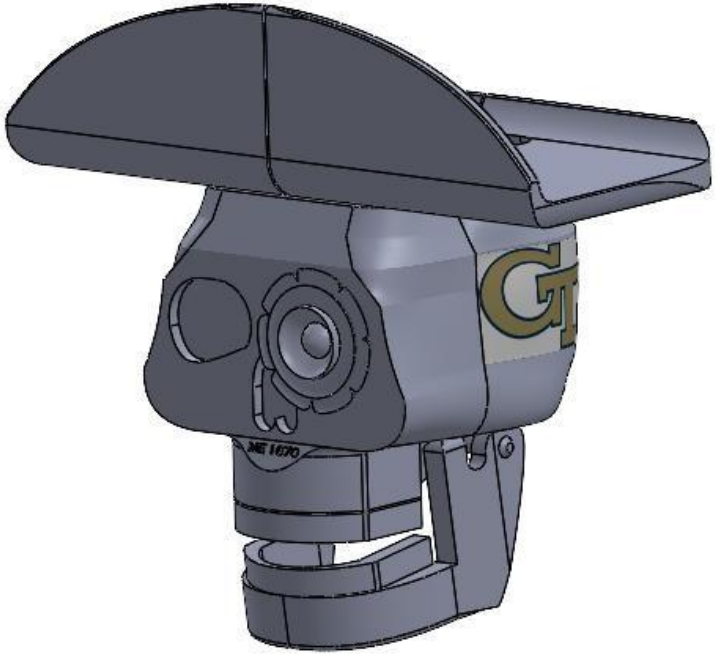

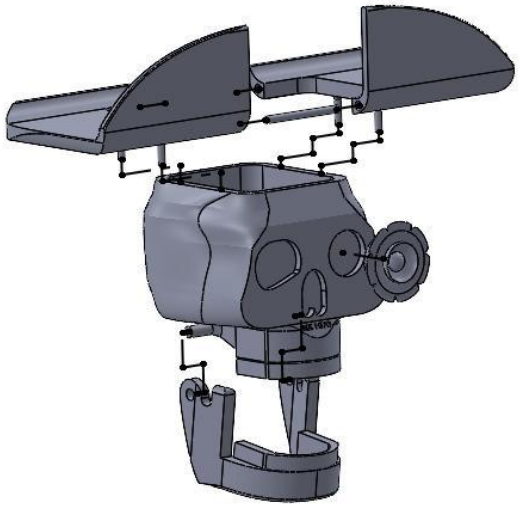

Final Assembly

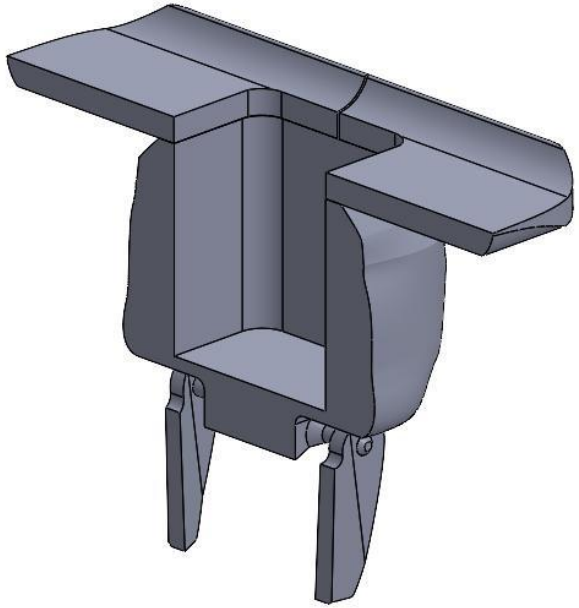

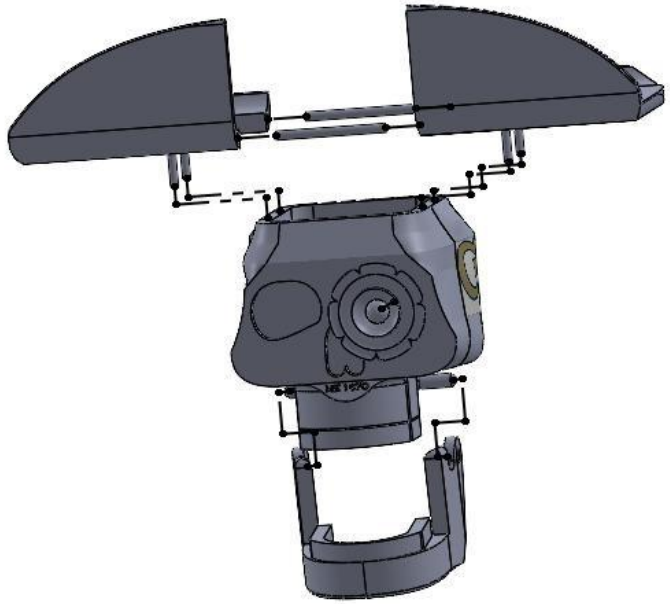

Mates Used

- Mates
  - (f) Coincident1 (Daniel_Velazquez_skull<1>,Origin)
  - Concentric1 (Daniel_Velazquez_skull<1>,Daniel_Velazquez_flower<1>)
  - Coincident2 (Daniel_Velazquez_skull<1>,Daniel_Velazquez_flower<1>)
  - Concentric2 (Daniel_Velazquez_skull<1>,Daniel_Velazquez_mariachi_hat<1>)
  - Concentric3 (Daniel_Velazquez_skull<1>,Daniel_Velazquez_mariachi_hat<1>)
  - Coincident3 (Daniel_Velazquez_skull<1>,Daniel_Velazquez_mariachi_hat<1>)
  - Concentric4 (Daniel_Velazquez_mariachi_hat<1>,Daniel_Velazquez_dower<2>)
  - Coincident4 (Daniel_Velazquez_mariachi_hat<1>,Daniel_Velazquez_dower<2>)
  - Concentric5 (Daniel_Velazquez_mariachi_hat<1>,Daniel_Velazquez_dower<1>)
  - Coincident6 (Daniel_Velazquez_mariachi_hat<1>,Daniel_Velazquez_dower<1>)
  - Concentric6 (Daniel_Velazquez_skull<1>,Daniel_Velazquez_lower_jaw<1>)
  - Concentric7 (Daniel_Velazquez_skull<1>,Daniel_Velazquez_lower_jaw<1>)
  - Coincident7 (Daniel_Velazquez_skull<1>,Daniel_Velazquez_lower_jaw<1>)
  - Coincident8 (Daniel_Velazquez_skull<1>,Daniel_Velazquez_lower_jaw<1>)

Part Name	Modeling Approach	Manufacturing Process	GD&T parameter to Control	Tolerance with symbol
Lower Jaw	Extrude, Extrude Cut, Hole Wizard, Fillet	Injection Molding	Position	⌀ 0.01in
Right Mariachi Hat	Extrude, Extrude Cut, Hole Wizard, Fillet	Infection Molding	Profile of a surface	⌓ 0.04in
Left Mariachi Hat	Mirror	Injection Molding	Profile of a surface	⌓ 0.04in
Skull	Loft, Extrude, Extrude Cut, Hole Wizard, Chamfer, Fillet	Casting	Profile of a surface	⌓ 0.04in
Flower	Revolve, Extrude Cut, Chamfer	Infection Molding	Concentricity	⌓ 0.02in

Parts in the assembly	Fit type	Dimensional Tolerance limits for Part A & B (in)	Max. Clearance or Interference (MMC/LMC)
Lower Jaw and Skull	Transition Fit	Lower Jaw: 0.1900 +0.0002/-0.0004 Skull: 0.1900 +0.0000/-0.0005	Max Clearance 0.0004 in (LMC)
Flower and Skull	Clearance Fit	Flower: 0.750 -0.001/-0.005 Skull: 0.750 +0.003/+0.000	Max Clearance 0.008 in (LMC)
Mariachi Hat and Skull	Transition Fit	Mariachi Hat: 0.11 +0.0003/-0.0002 Skull: 0.11 +0.0002/-0.0003	Max Clearance 0.0004 in (LMC)
Left/Right Mariachi Hat and Dower	Transition Fit	Mariachi Hat: 0.1250 +0.0002/-0.0003	Max Clearance 0.0004 in (LMC)